SMART VALVE CONTROLS
PNEUMATICACTUATORS

www.SMARTVALVES.co.uk

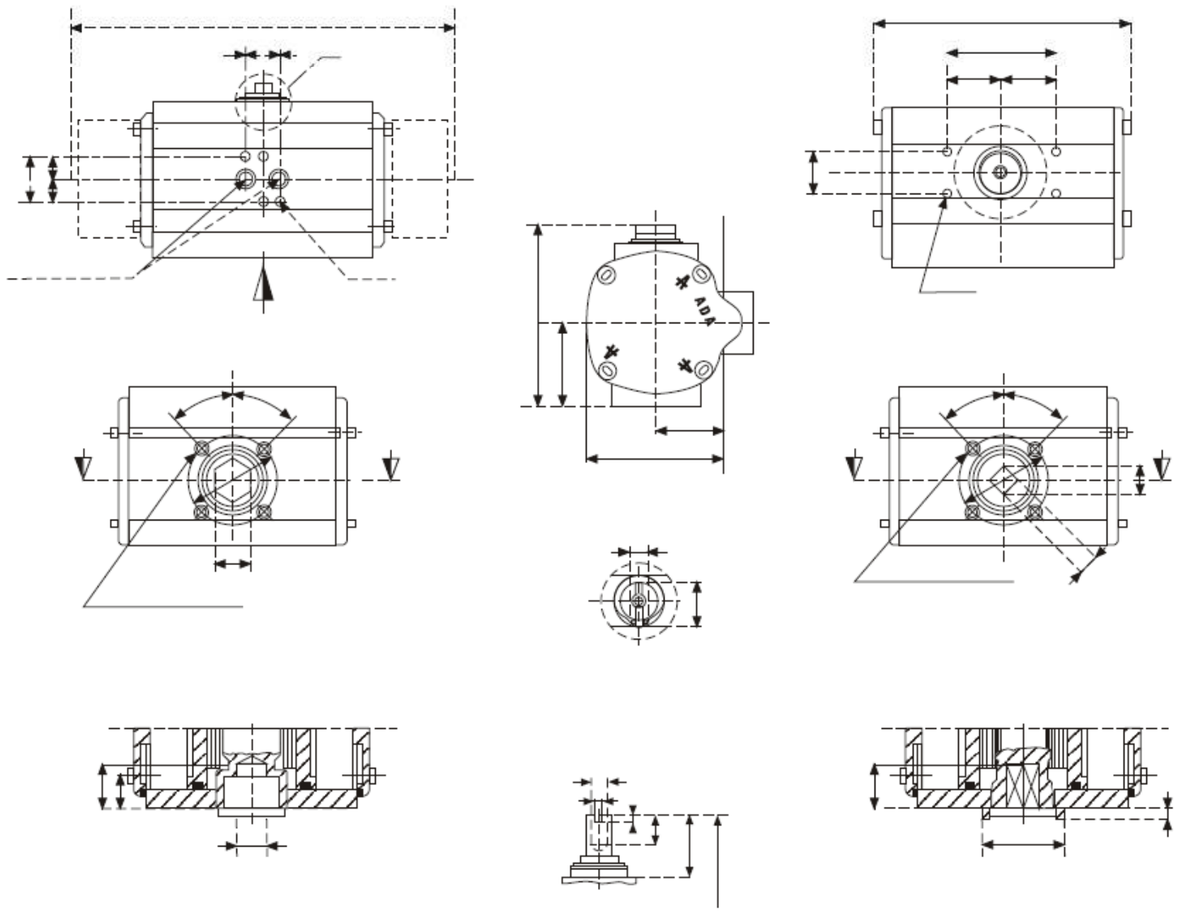
AD4